THUNDER Pro TE25
Thermal Image Scope



HIKMICRO THUNDER Pro TE25 Thermal Image Scope has 256 × 192 thermal detector and 1024 × 768 OLED monitor, which provides clear image under harsh environment conditions like darkness, fog, smoke, dust, rain, snow, wood, camouflage, etc. The scope is mainly applied to scenarios such as patrolling, and hunting, etc.

Key Features

- 256 × 192 thermal resolution, high sensitivity detector, NETD < 35 mK (25°C,F# = 1.0)
- Image processing technology: Adaptive AGC, DDE, 3D DNR
- 1024 × 768 resolution 0.39-inch OLED display
- Supports distance measurement, and hotspot function
- Supports video recording and snapshot, built-in EMMC (16 GB)
- Supports digital zoom and cursor function, palettes of color adjustable
- Up to 5 hours continuous working

▪ Specification

Thermal Module	
Image Sensor	VOx Uncooled Focal Plane Arrays
Max. Resolution	256 × 192
Frame Rate	25 Hz
Pixel Interval	12 μm
Response Waveband	8 μm to 14 μm
NETD	< 35 mK (@ 25°C),F# = 1.0
Lens (Focal Length)	25 mm
Detection Range	1200 m
IFOV	0.48 mrad
Field of View	7.03° × 5.39°
Min. Focusing Distance	0.5 m
Aperture	F1.0
Magnification	3.25 to 26 (x8 zoom)
Image Display	
Display	1024 × 768, 0.39 inch, OLED
Palettes	Black hot, white hot, red hot, fusion
Exit Pupil	6 mm
Eye Relief	45 mm
Diopter (Range)	-5D to +3D
System	
Record Video	On-board video recording
Capture Snapshot	Yes
Standby Mode	Yes
Uniformity Correction	Auto, Manual, External Correction
Storage	Built-in EMMC (16 GB)
PIP	Yes
DPC	Yes
Hotspot	Yes
Digital Zoom	1X, 2X, 4X, 8X
Hot Track	Yes
Reticle	Yes
Distance Measurement	Yes
Power Supply	
Battery Type	Replaceable Applicable type: CR123A, RCR123A
Battery Operating Time	5 h
Battery Capacity Display	Yes
Anti-reverse Battery Connection	Yes
Overvoltage Protection	Yes
Type-C Power Supply	Yes

General	
Work Temperature/Humidity	-20°C to 55°C (-4°F to 131°F)
Protection Level	IP67
Vibration & Shock	750 g/1 ms
Dimension	186.6 mm × 59.4 mm × 67.1 mm
Weight	415 g without eyepiece and batteries
Port	Type-C

▪ Available Model

HM-TR12-25XG/W-TE25

▪ Dimension

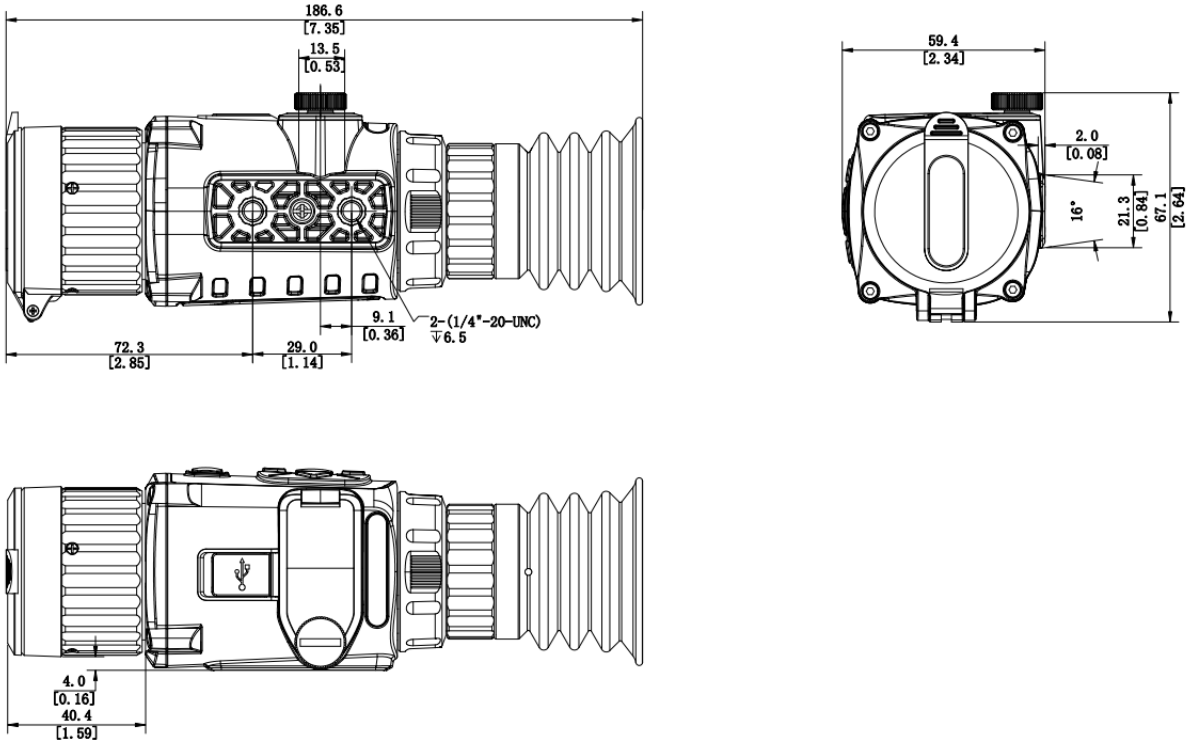

Unit:mm[Inch]

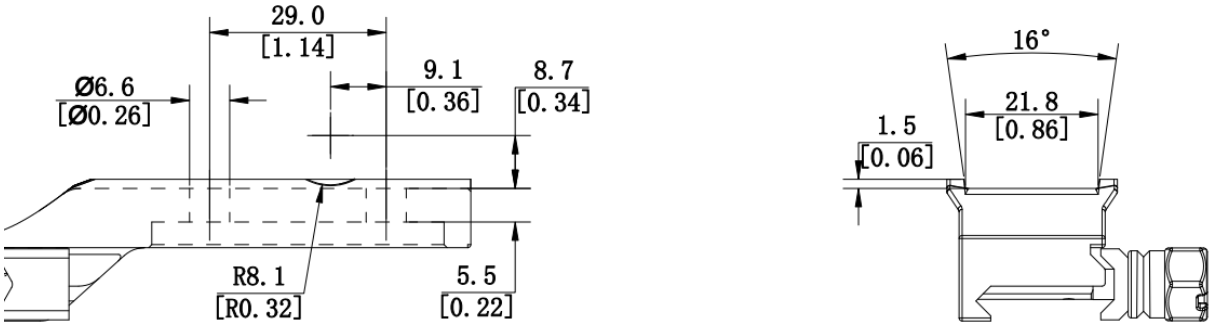

Unit:mm[Inch]

Accessory



Quick Start Guide (×1)



Battery CR123A (×2)

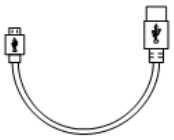

Type-C Cable (×1)

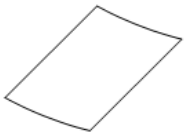

Dust-free Cloth (×1)



Tightening Plate (×1)



Bag (×1)

Optional

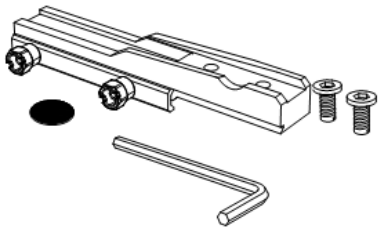

Rail System
Rail (×1)
Tightening Plate (×1)
Screws (×2)
Wrench (×1)

COMPLIANCE NOTICE: The thermal series products might be subject to export controls in various countries or regions, including without limitation, the United States, European Union, United Kingdom and/or other member countries of the Wassenaar Arrangement. Please consult your professional legal or compliance expert or local government authorities for any necessary export license requirements if you intend to transfer, export, re-export the thermal series products among different countries.

Room 313, Unit B, Building 2, 399 Danfeng Road, Xixing Subdistrict,Binjiang District, Hangzhou, Zhejiang

© Hangzhou Microimage Software Co., Ltd. 2020 | Data subject to change without notice!